YOYOND 悠远流体

- Sanitary Manual、Pneumatic Valve
- Sanitary Pipe Fittings
- Fluid Facility

过滤器技术参数

款式结构：Y型过滤器，角式过滤器，直通式过滤器。

应用：乳制品、啤酒、食品、饮料、制药液体管路过滤。

过滤网目数：40目～200目

材质：AISI304或AISI316L

特点：过滤面积大，装拆方便，维修方便。

Strainer technical parameter

Type: Y-type strainer, angle-type strainer, straight strainer

Application: Dairy、beer、food、beverage、pharmacy liquid pipeline filter.

Sieve mesh: 40～200

Material: AISI304 or AISI316L

Characteristic: The strainer is big, easy to install and disassemble, convenient to maintenance.

安全阀（溢流阀）技术参数

应用：管路及设备的过压卸载保护

调节范围：此阀门是依靠克服弹簧压力而控制阀门开启，设定压力是通过调整螺杆与阀体上的刻度相对应进行调整。

材质：AISI304或AISI316L

Safety valve(Relief valve) technical parameter

Application: Prevent the pipelines and equipments from overpressure

Adjustment: The valve depends on overcoming spring's pressure to control its opening, and the settled pressure is adjusted by the accordance of the screw and valve body's scale.

Material: AISI304 or AISI316L

安全阀(溢流阀) Safety valve(Relief valve) | 50007

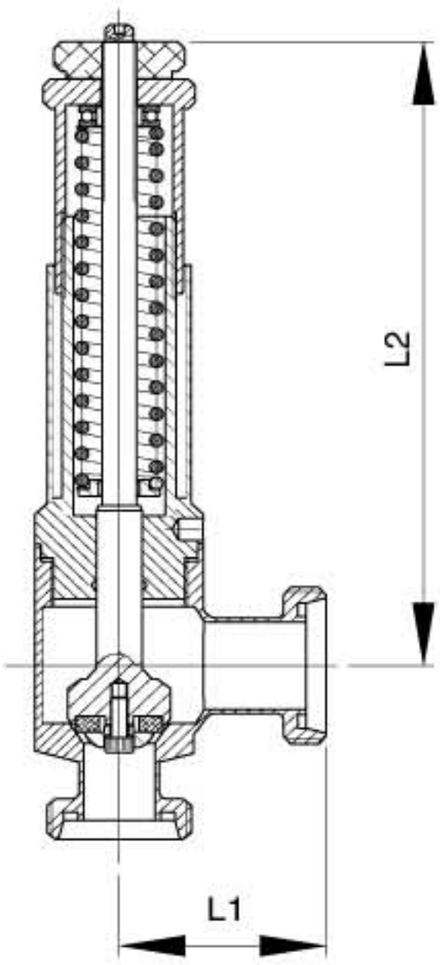

(螺纹式 Threaded)

Size	L2	L1				kg
		焊接式	螺纹式	卡箍式		
25	210.0	60.0	40.0	60.0		
32	220.0	60.0	40.0	60.0		
40	230.0	70.0	50.0	70.0		
50	240.0	80.0	60.0	80.0		

阀体组合Valve body combination

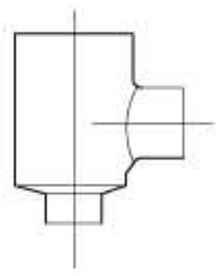

33

(焊接式 Welded)

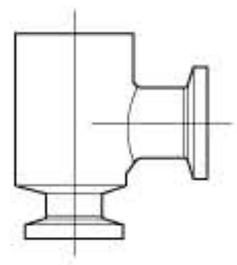

35

(卡箍式 Clamped)

卫生呼吸器 Sanitary rebreather | 50008

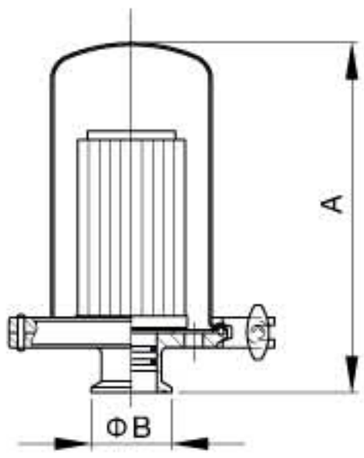

Size	A	B				kg
1"	180.0	50.5				
1.5"	180.0	50.5				
2"	180.0	64.0				

地漏 Floor drain | 50009

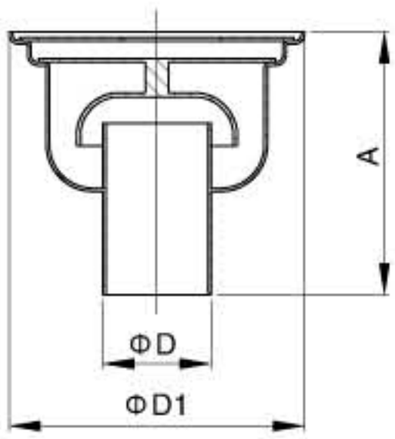

Size	A	D1	D			kg
1"	80.0	130.0	25.0			
1.5"	80.0	130.0	38.0			
2"	100.0	195.0	51.0			
2.5"	100.0	195.0	63.0			
3"	130.0	230.0	76.0			
4"	130.0	230.0	100.0			

螺纹式直通过滤器 Threaded straight strainer

DIN | 50010

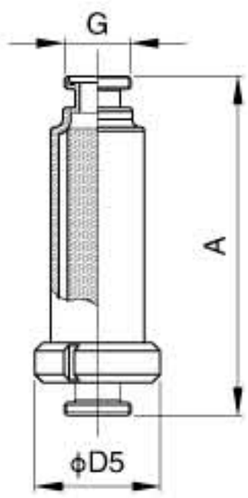

Size	A	G	D5			kg
DN25	306.0	RD52 × 1/6	95.0			
DN32	306.0	RD58 × 1/6	110.0			
DN40	306.0	RD65 × 1/6	110.0			
DN50	406.0	RD78 × 1/6	110.0			
DN65	503.0	RD95 × 1/6	127.0			
DN80	561.0	RD110 × 1/4	148.0			
DN100	662.0	RD130 × 1/4	178.0			

SMS | 50011

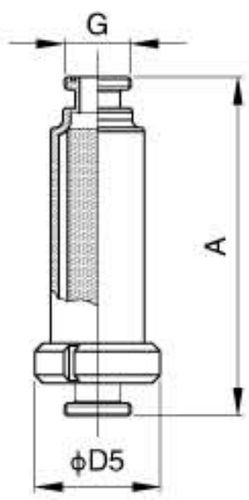

Size	A	G	D5			kg
25	306.0	RD40 × 1/6	95.0			
32	306.0	RD48 × 1/6	110.0			
38	306.0	RD60 × 1/6	110.0			
51	406.0	RD70 × 1/6	110.0			
63	503.0	RD85 × 1/6	127.0			
76	561.0	RD98 × 1/6	148.0			
102小	662.0	RD125 × 1/6	178.0			
102大	662.0	RD132 × 1/6	178.0			

ISO IDF | 50012

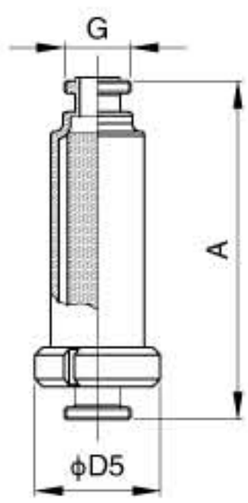

Size	A	G	D5			kg
1″	306.0	37.1 × 8TACME	95.0			
1 1/2″	306.0	50.6 × 8TACME	110.0			
2″	406.0	64.2 × 8TACME	110.0			
2 1/2″	503.0	77.7 × 8TACME	127.0			
3″	561.0	91.2 × 8TACME	148.0			
4″	662.0	118.4 × 8TACME	178.0			
4″	662.0	125.9 × 6TACME	178.0			

RJT | 50013

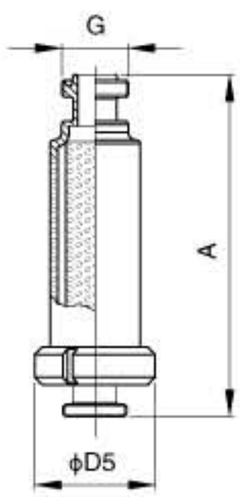

Size	A	G	D5			kg
1″	306.0	45.7 × 8TWHIT	95.0			
1 1/2″	306.0	58.4 × 8TWHIT	110.0			
2″	406.0	72.7 × 6TWHIT	110.0			
2 1/2″	503.0	85.4 × 6TWHIT	127.0			
3″	561.0	98.1 × 6TWHIT	148.0			
4″	662.0	123.8 × 6TWHIT	178.0			

螺纹角式过滤器 Threaded angle-type strainer

DIN | 50014

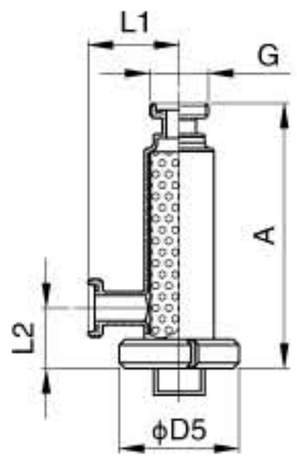

Size	A	G	D5	L1	L2	kg
DN25	306.0	RD52 × 1/6	95.0	60.0	70.0	
DN32	306.0	RD58 × 1/6	110.0	60.0	70.0	
DN40	306.0	RD65 × 1/6	110.0	80.0	70.0	
DN50	406.0	RD78 × 1/6	110.0	100.0	72.0	
DN65	503.0	RD95 × 1/6	127.0	120.0	85.0	
DN80	561.0	RD110 × 1/4	148.0	140.0	96.0	
DN100	662.0	RD130 × 1/4	178.0	160.0	117.0	

SMS | 50015

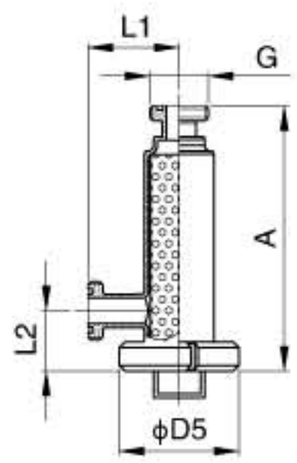

Size	A	G	D5	L1	L2	kg
25	306.0	RD40 × 1/6	95.0	60.0	70.0	
32	306.0	RD48 × 1/6	110.0	60.0	70.0	
38	306.0	RD60 × 1/6	110.0	80.0	70.0	
51	406.0	RD70 × 1/6	110.0	100.0	72.0	
63	503.0	RD85 × 1/6	127.0	120.0	85.0	
76	561.0	RD98 × 1/6	148.0	140.0	96.0	
102小	662.0	RD125 × 1/6	178.0	160.0	117.0	
102大	662.0	RD132 × 1/6	178.0	160.0	117.0	

ISO IDF | 50016

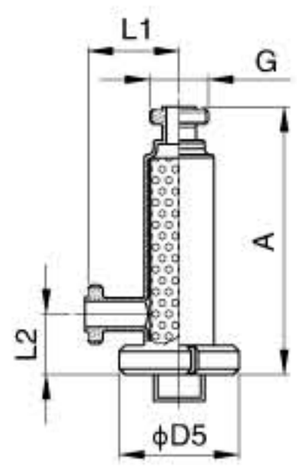

Size	A	G	D5	L1	L2	kg
1"	306.0	37.1 × 8TACME	95.0	60.0	70.0	
1 1/2"	306.0	50.6 × 8TACME	110.0	60.0	70.0	
2"	406.0	64.2 × 8TACME	110.0	100.0	72.0	
2 1/2"	503.0	77.7 × 8TACME	127.0	120.0	85.0	
3"	561.0	91.2 × 8TACME	148.0	140.0	96.0	
4"	662.0	118.4 × 8TACME	178.0	160.0	117.0	
4"	662.0	125.9 × 6TACME	178.0	160.0	117.0	

RJT | 50017

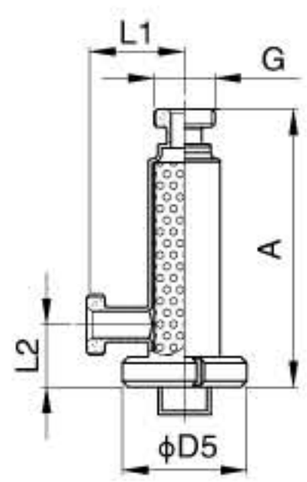

Size	A	G	D5	L1	L2	kg
1"	306.0	45.7 × 8TWHIT	95.0	60.0	70.0	
1 1/2"	306.0	58.4 × 8TWHIT	110.0	60.0	70.0	
2"	406.0	72.7 × 6TWHIT	110.0	100.0	72.0	
2 1/2"	503.0	85.4 × 6TWHIT	127.0	120.0	850	
3"	561.0	98.1 × 6TWHIT	148.0	140.0	96.0	
4"	662.0	123.8 × 6TWHIT	178.0	160.0	117.0	

螺纹式Y型过滤器 Threaded Y–type strainer

DIN | 50018

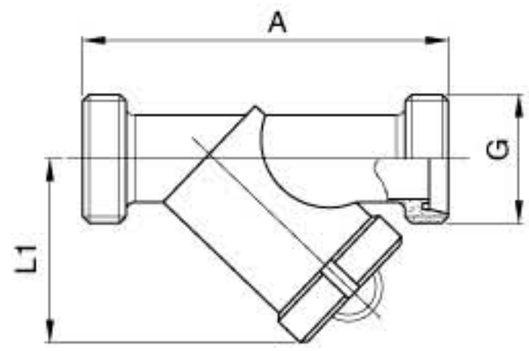

Size	A	L1	G			kg
DN25	125.0	95.0	RD52 × 1/6			
DN32	140.0	104.0	RD58 × 1/6			
DN40	165.0	110.0	RD65 × 1/6			
DN50	195.0	140.0	RD78 × 1/6			
DN65	230.0	185.0	RD95 × 1/6			
DN80	280.0	220.0	RD110 × 1/4			
DN100	340.0	248.0	RD130 × 1/4			

SMS | 50019

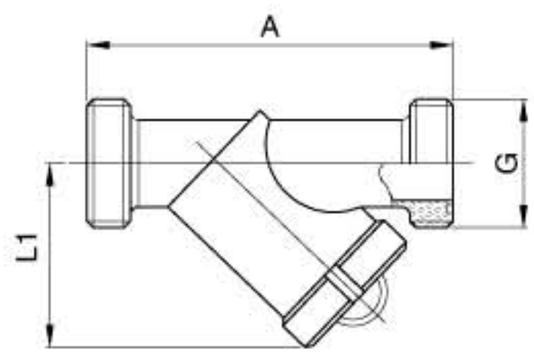

Size	A	L1	G			kg
25	123.0	90.0	RD40 × 1/6			
32	135.0	102.0	RD48 × 1/6			
38	144.0	107.0	RD60 × 1/6			
51	195.0	140.0	RD70 × 1/6			
63	210.0	165.0	RD85 × 1/6			
76	240.0	190.0	RD98 × 1/6			
89	295.0	225.0	RD110 × 1/6			
102小	340.0	249.0	RD125 × 1/6			
102大	340.0	249.0	RD132 × 1/6			

ISO IDF | 50020

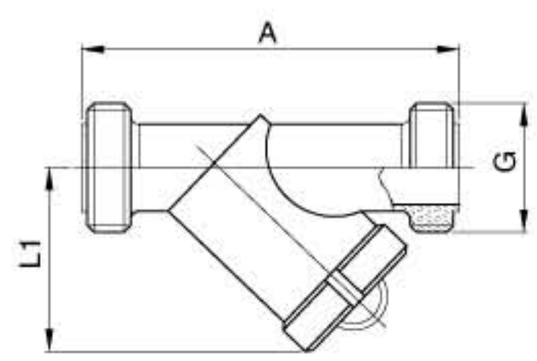

Size	A	L1	G			kg
1"	123.0	90.0	37.1 × 8TACME			
1 1/2"	135.0	102.0	50.6 × 8TACME			
2"	195.0	140.0	64.2 × 8TACME			
2 1/2"	210.0	165.0	77.7 × 8TACME			
3"	240.0	190.0	91.2 × 8TACME			
4"	340.0	249.0	118.4 × 8TACME			
4"	340.0	249.0	125.9 × 6TACME			

RJT | 50021

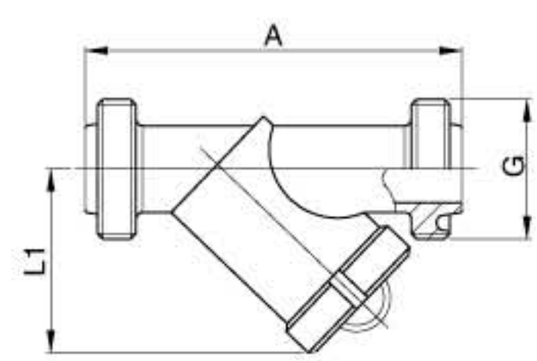

Size	A	L1	G			kg
1"	123.0	90.0	45.7 × 8TWHIT			
1 1/2"	135.0	102.0	58.4 × 8TWHIT			
2"	195.0	140.0	72.7 × 6TWHIT			
2 1/2"	210.0	165.0	85.4 × 6TWHIT			
3"	240.0	190.0	98.1 × 6TWHIT			
4"	340.0	249.0	123.8 × 6TWHIT			

焊接式直通过滤器 Welded straight strainer

DIN | 50022

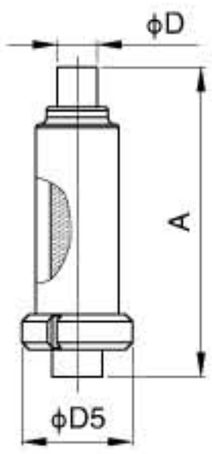

Size	A	D	D5			kg
DN25	306.0	28.0	95.0			
DN32	306.0	34.0	110.0			
DN40	306.0	40.0	110.0			
DN50	406.0	52.0	110.0			
DN65	503.0	70.0	127.0			
DN80	561.0	85.0	148.0			
DN100	662.0	104.0	178.0			

SMS | ISO | IDF | 3A | 50023

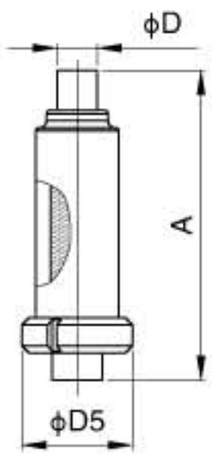

Size		A	D	D5		kg
1 "	25	306.0	25.4	95.0		
1 1/4 "	32	306.0	32.0	110.0		
1 1/2 "	38	306.0	38.1	110.0		
2 "	51	406.0	50.8	110.0		
2 1/2 "	63	503.0	63.5	127.0		
3 "	76	561.0	76.2	148.0		
3 1/2 "	89		89.0			
4 "	102	662.0	101.6	178.0		

焊接角式过滤器 Welded angle–type strainer

DIN | 50024

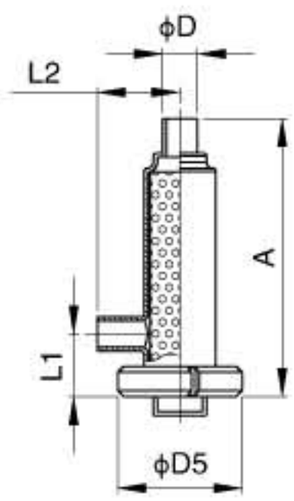

Size	A	D	D5	L1	L2	kg
DN25	306.0	28.0	95.0	60.0	70.0	
DN32	306.0	34.0	110.0	60.0	70.0	
DN40	306.0	40.0	110.0	80.0	70.0	
DN50	406.0	52.0	110.0	100.0	72.0	
DN65	503.0	70.0	127.0	120.0	85.0	
DN80	561.0	85.0	148.0	140.0	96.0	
DN100	662.0	104.0	178.0	160.0	117.0	

SMS | ISO | IDF | 3A | 50025

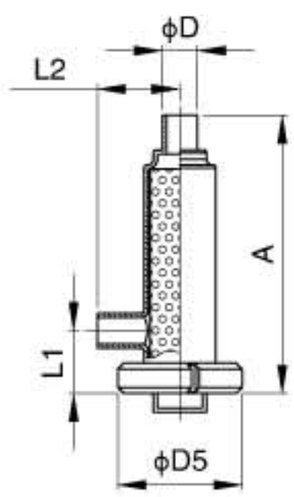

Size		A	D	D5	L1	L2	kg
1 "	25	306.0	25.4	95.0	60.0	70.0	
1 1/4 "	32	306.0	32.0	110.0	60.0	70.0	
1 1/2 "	38	306.0	38.1	110.0	80.0	70.0	
2 "	51	406.0	50.8	110.0	100.0	72.0	
2 1/2 "	63	503.0	63.5	127.0	120.0	85.0	
3 "	76	561.0	76.2	148.0	140.0	96.0	
3 1/2 "	89						
4 "	102	662.0	101.6	178.0	160.0	117.0	

焊接式Y型过滤器 Welded Y–type strainer

DIN | 50026

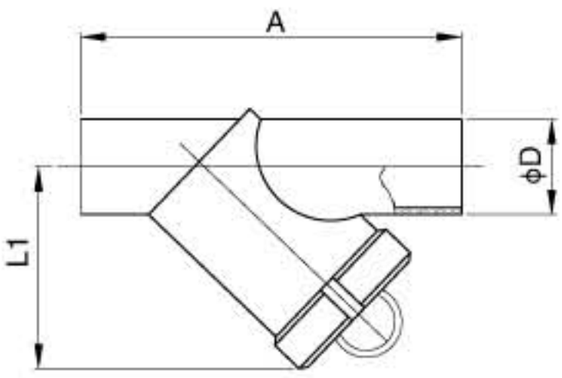

Size	A	D	L1			kg
DN25	125.0	28.0	95.0			
DN32	140.0	34.0	104.0			
DN40	165.0	40.0	110.0			
DN50	195.0	52.0	140.0			
DN65	230.0	70.0	185.0			
DN80	280.0	85.0	220.0			
DN100	340.0	104.0	248.0			

SMS | ISO | IDF | 3A | 50027

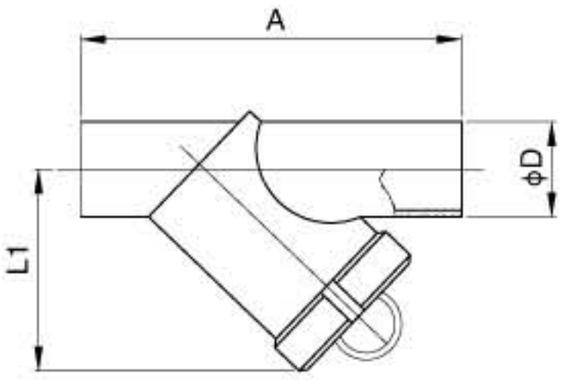

Size		A	D	L1		kg
1″	25	123.0	25.4	90.0		
1 1/2″	32	135.0	32.0	102.0		
1 1/4″	38	144.0	38.1	107.0		
2″	51	195.0	50.8	140.0		
2 1/2″	63	210.0	63.5	165.0		
3″	76	240.0	76.2	190.0		
3 1/2″	89	295.0	89.0	225.0		
4″	102	340.0	101.6	249.0		

卡箍式直通过滤器 Clamped straight strainer

DIN | 50028

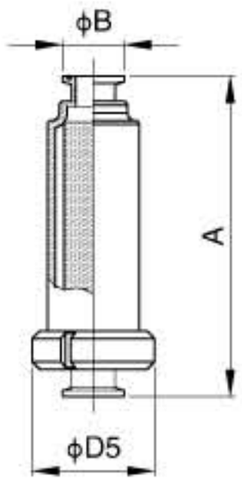

Size	A	B	D5			kg
DN25	306.0	50.5	95.0			
DN32	306.0	50.5	110.0			
DN40	306.0	50.5	110.0			
DN50	406.0	64.0	110.0			
DN65	503.0	77.5	127.0			
DN80	561.0	91.0	148.0			
DN100	662.0	119.0	178.0			

SMS | ISO | IDF | 3A | 50029

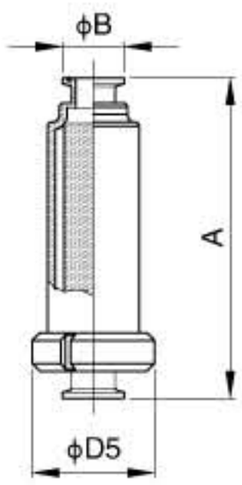

Size		A	B	D5		kg
1″	25	306.0	50.5	95.0		
1 1/2″	32	306.0	50.5	110.0		
1 1/4″	38	306.0	50.5	110.0		
2″	51	406.0	64.0	110.0		
2 1/2″	63	503.0	77.5	127.0		
3″	76	561.0	91.0	148.0		
4″	102	662.0	119.0	178.0		

卡箍角式过滤器 Clamped angle–type strainer

DIN | 50030

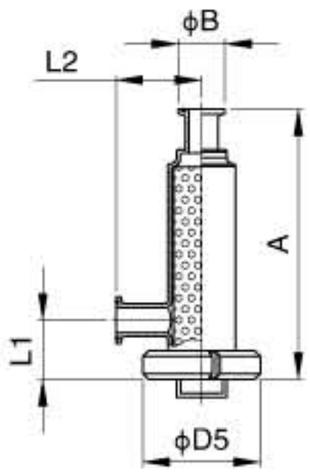

Size	A	B	D5	L1	L2	kg
DN25	306.0	50.5	95.0	60.0	70.0	
DN32	306.0	50.5	110.0	60.0	70.0	
DN40	306.0	50.5	110.0	80.0	70.0	
DN50	406.0	64.0	1100	100.0	72.0	
DN65	503.0	91.0	127.0	120.0	85.0	
DN80	561.0	106.0	148.0	140.0	96.0	
DN100	662.0	119.0	178.0	160.0	117.0	

SMS | ISO | IDF | 3A | 50031

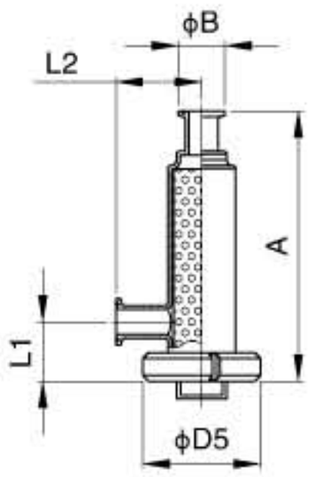

Size		A	B	D5	L1	L2	kg
1"	25	306.0	50.5	95.0	60.0	70.0	
1 1/2"	32	306.0	50.5	110.0	60.0	70.0	
1 1/4"	38	306.0	50.5	110.0	80.0	70.0	
2"	51	406.0	64.0	110.0	100.0	72.0	
2 1/2"	63	503.0	77.5	127.0	120.0	85.0	
3"	76	561.0	91.0	148.0	140.0	96.0	
4"	102	662.0	119.0	178.0	160.0	117.0	

卡箍Y型过滤器 Clamped Y–type strainer

DIN | 50032

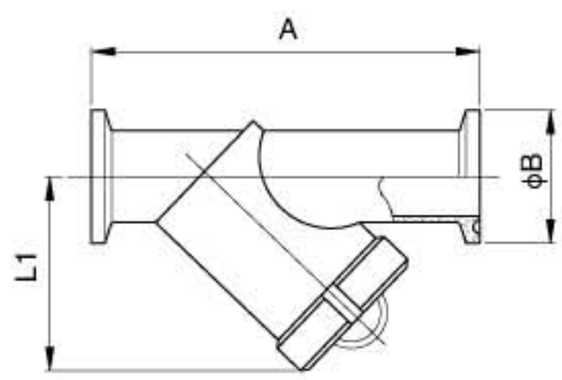

Size	A	B	L1			kg
DN25	125.0	50.5	95.0			
DN32	140.0	50.5	104.0			
DN40	165.0	50.5	110.0			
DN50	195.0	64.0	140.0			
DN65	230.0	91.0	185.0			
DN80	280.0	106.0	220.0			
DN100	340.0	119.0	248.0			

SMS | ISO | IDF | 3A | 50033

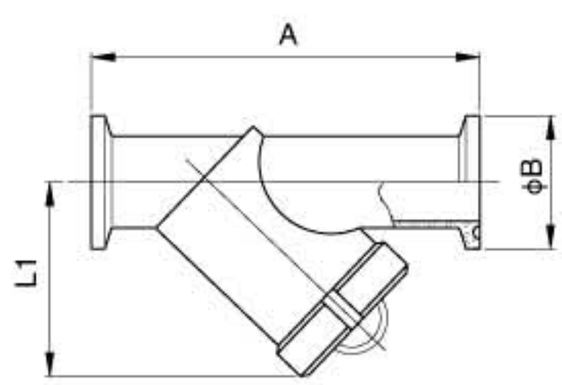

Size		A	B	L1		kg
1"	25	123.0	50.5	90.0		
1 1/2"	32	135.0	50.5	102.0		
1 1/4"	38	144.0	50.5	107.0		
2"	51	195.0	64.0	140.0		
2 1/2"	63	210.0	77.5	165.0		
3"	76	240.0	91.0	190.0		
3 1/2"	89	295.0	106.0	225.0		
4"	102	340.0	119.0	249.0		