YOYOND 悠远流体

- ◆ Sanitary Manual、Pneumatic Valve
- ◆ Sanitary Pipe Fittings
- ◆ Fluid Facility

由任技术参数

规　格……1 " – 6 "　DIN15–DIN150

材　质……采用AISI304 、316或AISI316L

光洁度……内表面机械抛光Ra≤0.4 ~ 0.8 μ m,
外表面亮光或亚光（Ra≤0.8 μ m）

Union technical parameter

Size …… 1 " – 6 " DIN15–DIN150

Material ……Adopts AISI304、 316 or AISI 316L

Fineness …… Inner surface mechanical polish Ra≤0.4 ~ 0.8 μ m ,outer surface gloss polished or dull polished Ra≤0.8 μ m

由任(DIN11850)推荐系列 Union recommended series

圆螺母 Round nut | 60001

★ 有关密封圈请参照本画册P101页 ★ Please refer to page 101 for the gaskets.

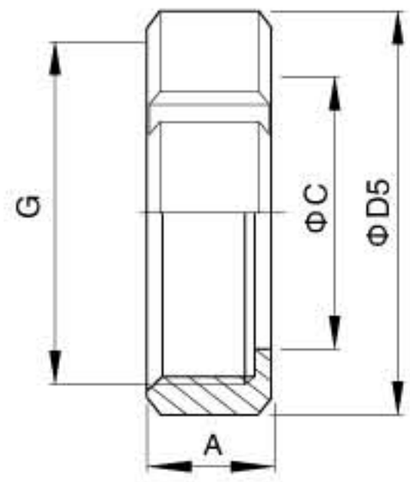

Size	A	G	D5	C		kg
DN15	18.0	RD34 × 1/8	44.0	25.0		
DN20	20.0	RD44 × 1/6	54.0	31.0		
DN25	21.0	RD52 × 1/6	63.0	36.0		
DN32	21.0	RD58 × 1/6	70.0	42.0		
DN40	21.0	RD65 × 1/6	78.0	49.0		
DN50	22.0	RD78 × 1/6	92.0	62.0		
DN65	25.0	RD95 × 1/6	110.0	80.0		
DN80	27.0	RD110 × 1/4	125.0	94.0		
DN100	29.0	RD130 × 1/4	146.0	115.0		
DN125	32.0	RD160 × 1/4	178.0	138.0		
DN150	38.0	RD190 × 1/4	210.0	164.0		

螺纹接头 Male | 60002

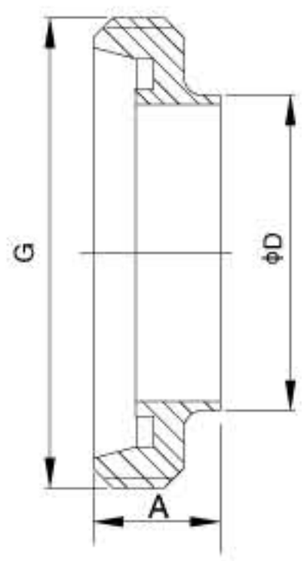

Size	A	D	G			kg
DN15	17.0	18.0	RD34 × 1/8			
DN20	19.0	22.0	RD44 × 1/6			
DN25	20.0	28.0	RD52 × 1/6			
DN32	20.0	34.0	RD58 × 1/6			
DN40	20.0	40.0	RD65 × 1/6			
DN50	21.0	52.0	RD78 × 1/6			
DN65	23.0	70.0	RD95 × 1/6			
DN80	25.0	85.0	RD110 × 1/4			
DN100	28.0	104.0	RD130 × 1/4			
DN125	30.0	129.0	RD160 × 1/4			
DN150	35.0	154.0	RD190 × 1/4			

平接头 Liner | 60003

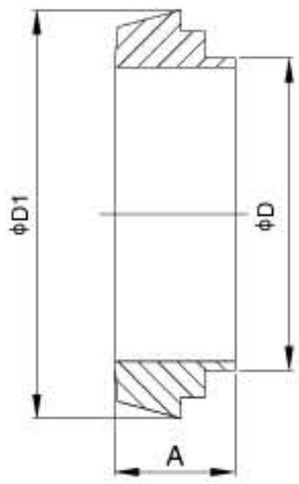

Size	A	D	D1			kg
DN15	13.0	18.0	28.0			
DN20	15.0	22.0	36.0			
DN25	17.0	28.0	44.0			
DN32	17.0	34.0	50.0			
DN40	19.0	40.0	56.0			
DN50	20.0	52.0	68.0			
DN65	20.0	70.0	86.0			
DN80	23.0	85.0	100.0			
DN100	26.0	104.0	121.0			
DN125	33.0	129.0	150.0			
DN150	34.0	154.0	176.0			

平接头 Liner | 60004

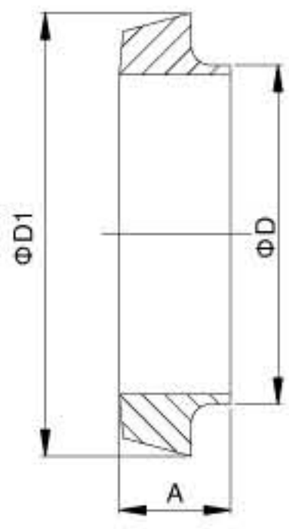

Size	A	D	D1			kg
DN15	13.0	18.0	28.0			
DN20	13.0	22.0	36.0			
DN25	14.0	28.0	44.0			
DN32	14.0	34.0	50.0			
DN40	16.0	40.0	56.0			
DN50	17.0	52.0	68.0			
DN65	18.0	70.0	86.0			
DN80	20.0	85.0	100.0			
DN100	22.0	104.0	121.0			
DN125	29.0	129.0	150.0			
DN150	30.0	154.0	176.0			

由任(DIN11851) Union

长型螺纹接头 Long-type male | 60005

★ 有关密封圈请参照本画册P101页 ★ Please refer to page 101 for the gaskets.

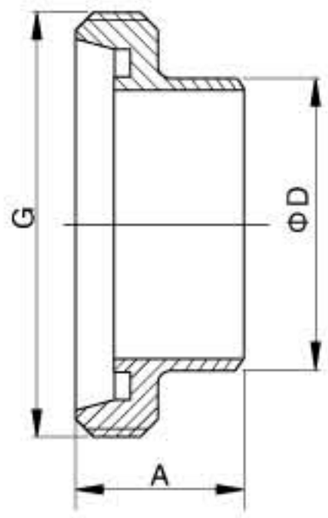

Size	A	D	G			kg
DN15	21.0	21.0	RD34 × 1/8			
DN20	24.0	25.0	RD44 × 1/6			
DN25	29.0	31.0	RD52 × 1/6			
DN32	32.0	37.0	RD58 × 1/6			
DN40	33.0	43.0	RD65 × 1/6			
DN50	35.0	55.0	RD78 × 1/6			
DN65	40.0	72.0	RD95 × 1/6			
DN80	45.0	87.0	RD110 × 1/4			
DN100	54.0	106.0	RD130 × 1/4			
DN125	46.0	132.0	RD160 × 1/4			
DN150	50.0	157.0	RD190 × 1/4			

长型平接头 Long-type liner | 60006

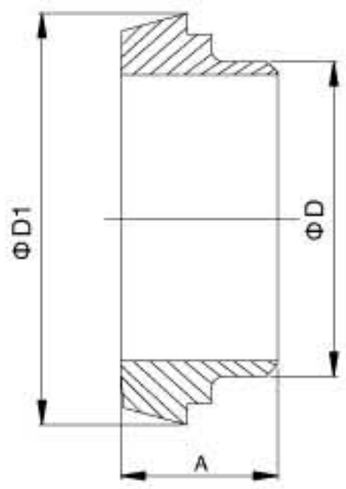

Size	A	D	D1			kg
DN15	17.0	21.0	28.0			
DN20	18.0	25.0	36.0			
DN25	22.0	31.0	44.0			
DN32	25.0	37.0	50.0			
DN40	26.0	43.0	56.0			
DN50	28.0	55.0	68.0			
DN65	32.0	72.0	86.0			
DN80	37.0	87.0	100.0			
DN100	44.0	106.0	121.0			
DN125	34.0	132.0	150.0			
DN150	37.0	157.0	176.0			

长型螺纹接头 Long-type male | 60007

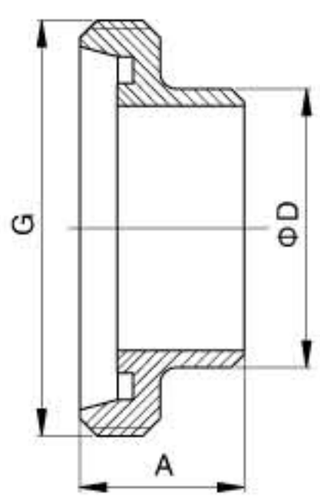

Size	A	D	G			kg
DN15	21.0	24.0	RD34 × 1/8			
DN20	24.0	30.0	RD44 × 1/6			
DN25	29.0	35.0	RD52 × 1/6			
DN32	32.0	41.0	RD58 × 1/6			
DN40	33.0	48.0	RD65 × 1/6			
DN50	35.0	61.0	RD78 × 1/6			
DN65	40.0	79.0	RD95 × 1/6			
DN80	45.0	93.0	RD110 × 1/4			
DN100	54.0	114.0	RD130 × 1/4			
DN125	46.0	137.0	RD160 × 1/4			
DN150	50.0	163.0	RD190 × 1/4			

长型平接头 Long-type liner | 60008

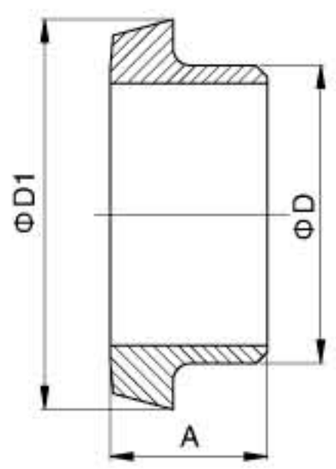

Size	A	D	D1			kg
DN15	17.0	24.0	28.0			
DN20	18.0	30.0	36.0			
DN25	22.0	35.0	44.0			
DN32	25.0	41.0	50.0			
DN40	26.0	48.0	56.0			
DN50	28.0	61.0	68.0			
DN65	32.0	79.0	86.0			
DN80	37.0	93.0	100.0			
DN100	44.0	114.0	121.0			
DN125	34.0	137.0	150.0			
DN150	37.0	163.0	176.0			

由任(DIN11851) Union

膨胀型平接头 Expanded liner | 60009

★ 有关密封圈请参照本画册P101页 ★ Please refer to page 101 for the gaskets.

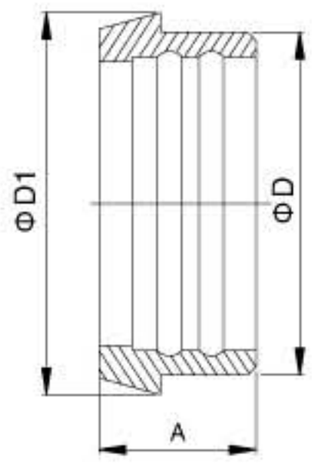

Size	A	D	D1			kg
DN15	17.0	24.0	28.0			
DN20	18.0	30.0	36.0			
DN25	22.0	35.0	44.0			
DN32	25.0	41.0	50.0			
DN40	26.0	48.0	56.0			
DN50	28.0	61.0	68.0			
DN65	32.0	79.0	86.0			
DN80	37.0	93.0	100.0			
DN100	44.0	114.0	121.0			
DN125	34.0	137.0	150.0			
DN150	37.0	163.0	176.0			

膨胀型螺纹接头 Expanded male | 60010

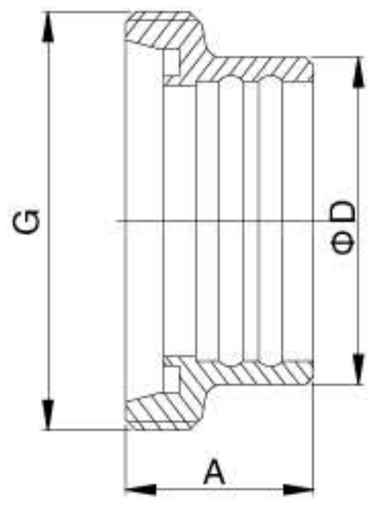

Size	A	D	G			kg
DN15	21.0	24.0	RD34 × 1/8			
DN20	24.0	30.0	RD44 × 1/6			
DN25	29.0	35.0	RD52 × 1/6			
DN32	32.0	41.0	RD58 × 1/6			
DN40	33.0	48.0	RD65 × 1/6			
DN50	35.0	61.0	RD78 × 1/6			
DN65	40.0	79.0	RD95 × 1/6			
DN80	45.0	93.0	RD110 × 1/4			
DN100	54.0	114.0	RD130 × 1/4			
DN125	46.0	137.0	RD160 × 1/4			
DN150	50.0	163.0	RD190 × 1/4			

由任(SMS) 推荐系列 Union recommended series

圆螺母 Round nut | 60011

★ 有关密封圈请参照本画册P101页　★ Please refer to page 101 for the gaskets.

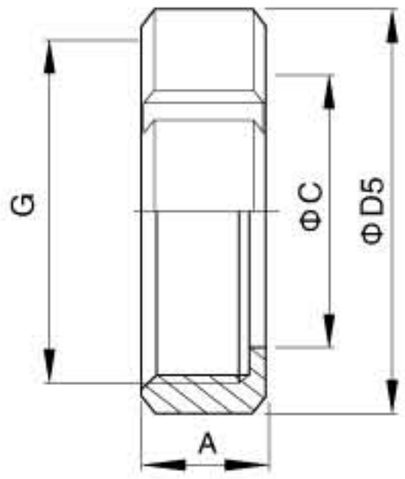

Size	A	G	D5	C		kg
25	20.1	RD40 × 1/6	50.0	32.0		
32	20.0	RD48 × 1/6	60.0	40.0		
38	22.0	RD60 × 1/6	72.0	48.0		
51	22.0	RD70 × 1/6	82.0	60.5		
63	25.0	RD85 × 1/6	97.0	74.0		
76	26.0	RD98 × 1/6	111.0	87.0		
89	28.0	RD110 × 1/6	125.0	100.0		
102小	30.0	RD125 × 1/6	138.0	117.0		
102大	30.0	RD132 × 1/6	146.0	117.0		

螺纹接头 Male | 60012

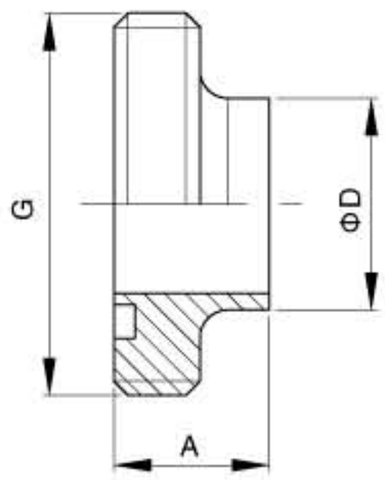

Size	A	G	D			kg
25	18.0	RD40 × 1/6	25.4			
32	18.0	RD48 × 1/6	32.0			
38	20.0	RD60 × 1/6	38.1			
51	20.0	RD70 × 1/6	50.8			
63	24.0	RD85 × 1/6	63.5			
76	25.0	RD98 × 1/6	76.2			
89	26.0	RD110 × 1/6	89.0			
102小	27.0	RD125 × 1/6	101.6			
102大	27.0	RD132 × 1/6	101.6			

圆弧型平接头 Circular liner | 60013

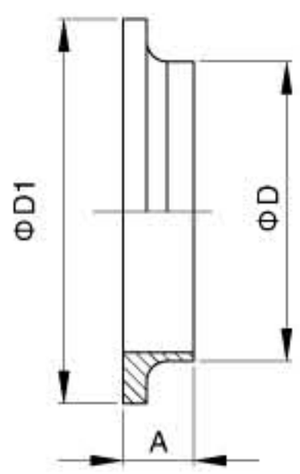

Size	A	D	D1			kg
25	12.0	25.4	35.5			
32	12.0	32.0	43.5			
38	13.0	38.1	55.5			
51	13.0	50.8	65.5			
63	14.0	63.5	80.5			
76	14.0	76.2	93.8			
89	15.0	89.0	105.8			
102小	17.0	101.6	118.0			
102大	17.0	101.6	127.8			

台阶型平接头 Stepped liner | 60014

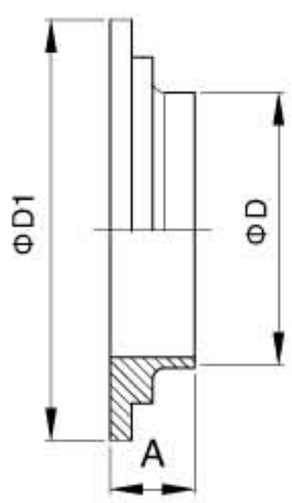

Size	A	D	D1			kg
25	12.0	25.4	35.5			
32	12.0	32.0	43.5			
38	13.0	38.1	55.5			
51	13.0	50.8	65.5			
63	14.0	63.5	80.5			
76	14.0	76.2	93.8			
89	15.0	89.0	105.8			
102小	17.0	101.6	118.0			
102大	17.0	101.6	127.8			

由任(SMS)长型 Long–type union

圆螺母 Round nut | 60015

★ 有关密封圈请参照本画册P101页 ★ Please refer to page 101 for the gaskets.

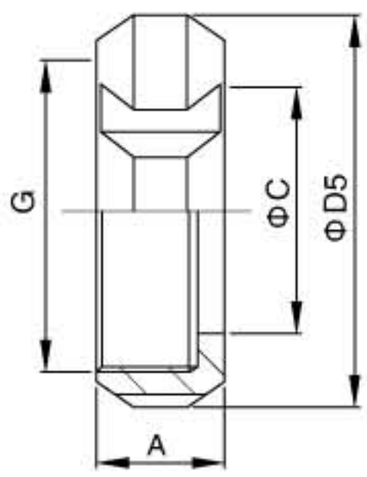

Size	A	G	D5	C		kg
25	20.0	RD40 × 1/6	50.0	32.0		
38	25.0	RD60 × 1/6	72.0	48.0		
51	26.0	RD70 × 1/6	82.0	60.5		
63	30.0	RD85 × 1/6	97.0	74.0		
76	32.0	RD98 × 1/6	111.0	87.0		
102小	32.0	RD125 × 1/6	138.0	117.0		
102大	45.0	RD132 × 1/6	146.0	117.0		

螺纹接头 Male | 60016

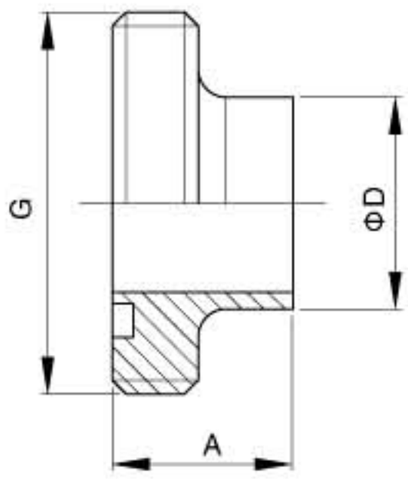

Size	A	D	G			kg
25	19.0	25.4	RD40 × 1/6			
38	23.0	38.1	RD60 × 1/6			
51	23.0	50.8	RD70 × 1/6			
63	27.0	63.5	RD85 × 1/6			
76	27.0	76.2	RD98 × 1/6			
102小	27.0	101.6	RD125 × 1/6			
102大	30.0	101.6	RD132 × 1/6			

圆弧型平接头 Circular liner | 60017

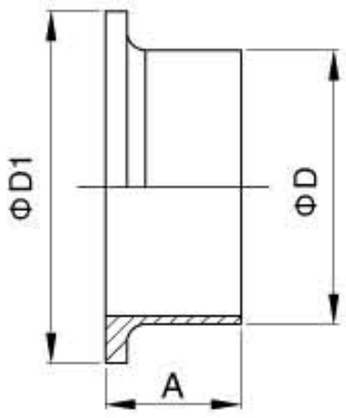

Size	A	D	D1			kg
25	15.0	25.4	35.5			
38	20.0	38.1	55.5			
51	20.0	50.8	65.5			
63	21.0	63.5	80.5			
76	21.0	76.2	93.8			
102小	21.0	101.6	118.0			
102大	21.0	101.6	127.8			

台阶型平接头 Stepped liner | 60018

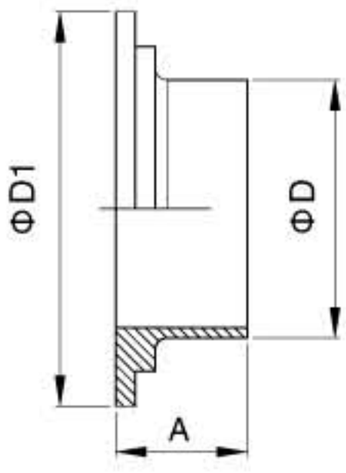

Size	A	D	D1			kg
25	15.0	25.4	35.5			
38	20.0	38.1	55.5			
51	20.0	50.8	65.5			
63	21.0	63.5	80.5			
76	21.0	76.2	93.8			
102小	21.0	101.6	118.0			
102大	21.0	101.6	127.8			

由任 Union(ISO/IDF)

圆螺母 Round nut 13R | 60019

★ 有关密封圈请参照本画册P101页 ★ Please refer to page 101 for the gaskets.

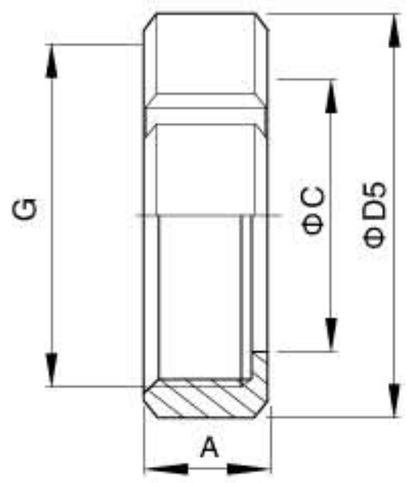

Size	A	G	D5	C		kg
1″	30.0	38.3 × 8TACME	49.0	30.5		
1 1/2″	30.0	51.8 × 8TACME	62.0	43.5		
2″	30.0	65.3 × 8TACME	76.0	57.0		
2 1/2″	30.0	78.8 × 8TACME	90.0	70.7		
3″	30.0	92.3 × 8TACME	103.0	83.3		
4″ (ISO)	30.0	119.4 × 8TACME	135.0	110.0		
4″ (IDF)	35.0	127.2 × 6TACME	138.0	112.0		

六角螺母 Hexagon nut 13H | 60020

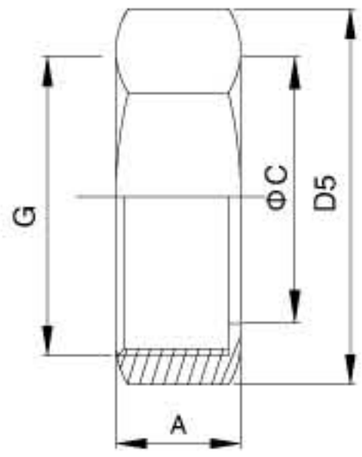

Size	A	G	D5	C		kg
1″	30.0	38.3 × 8TACME	53.1	30.5		
1 1/2″	30.0	51.8 × 8TACME	69.3	43.5		
2″	30.0	65.3 × 8TACME	86.6	57.0		
2 1/2″	30.0	78.8 × 8TACME	103.9	70.7		
3″	30.0	92.3 × 8TACME	121.3	83.3		
4″ (ISO)	30.0	119.4 × 8TACME	155.9	110.0		
4″ (IDF)	35.0	127.2 × 6TACME	165.1	112.0		

螺纹接头 Male | 60021

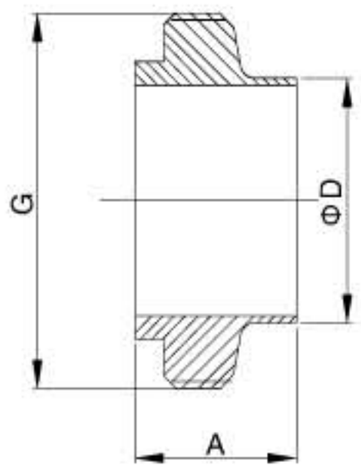

Size	A	G	D			kg
			IDF	ISO		
1″	21.5	37.1 × 8TACME	25.4	25.6		
1 1/2″	21.5	50.6 × 8TACME	38.1	38.6		
2″	21.5	64.2 × 8TACME	50.8	51.6		
2 1/2″	21.5	77.7 × 8TACME	63.5	64.1		
3″	21.5	91.2 × 8TACME	76.2	76.7		
4″ (ISO)	21.5	118.4 × 8TACME	/	102.5		
4″ (IDF)	30.0	125.9 × 6TACME	101.6	/		

平接头 Liner | 60022

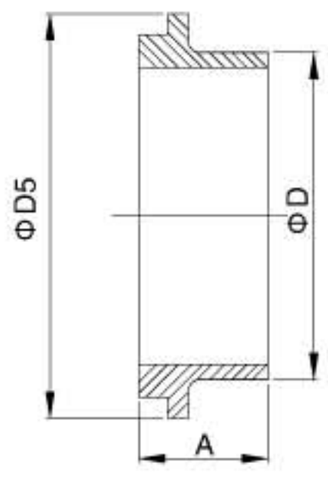

Size	A	D5	D			kg
			IDF	ISO		
1″	21.5	33.8	25.4	25.6		
1 1/2″	21.5	47.0	38.1	38.6		
2″	21.5	60.5	50.8	51.6		
2 1/2″	21.5	74.0	63.5	64.1		
3″	21.5	87.5	76.2	76.7		
4″ (ISO)	21.5	114.1	/	102.5		
4″ (IDF)	30.0	120.6	101.6	/		

由任 Union(3A)

六角螺母 Hexagon nut | 60023

★ 有关密封圈请参照本画册P101页 ★ Please refer to page 101 for the gaskets.

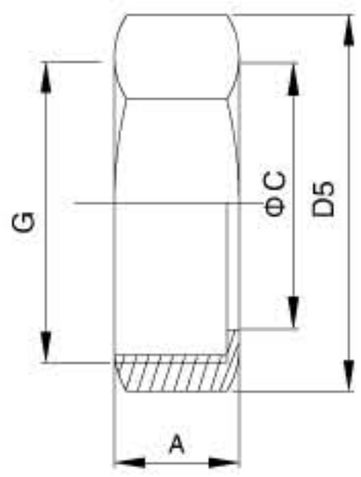

Size	A	G	D5	C		kg
1″	23.0	38.02 x 1/8TACME	52.0	30.3		
1 1/2″	24.6	51.54 x 1/8TACME	70.6	43.4		
2″	27.0	65.05 x 1/8TACME	88.0	56.5		
2 1/2″	29.6	78.56 x 1/8TACME	105.5	69.6		
3″	32.5	92.08 x 1/8TACME	123.0	82.7		
4″	38.1	120.14 x 1/6TACME	159.0	108.9		

螺纹接头 Male | 60024

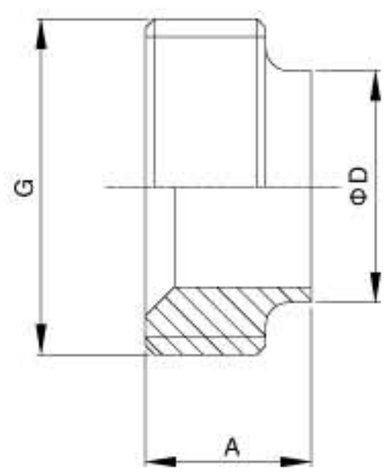

Size	G	D	A			kg
			15TRF	15A		
1″	37.13 x 1/8TACME	25.4	18.3	34.9		
1 1/2″	50.65 x 1/8TACME	38.1	18.3	38.1		
2″	64.1 x 1/8TACME	50.8	19.1	38.1		
2 1/2″	77.6 x 1/8TACME	63.5	22.3	44.5		
3″	91.1 x 1/8TACME	76.2	23.1	44.5		
4″	119.25 x 1/6TACME	101.6	26.2	44.5		

平接头 Liner | 60025

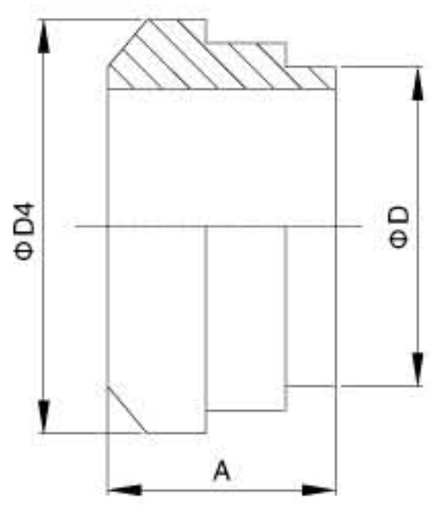

Size	D	D4	A			kg
			14PRF	14A		
1″	25.4	33.3	18.3	34.9		
1 1/2″	38.1	46.8	18.3	38.1		
2″	50.8	60.3	19.1	38.1		
2 1/2″	63.5	73.8	22.3	44.5		
3″	76.2	87.3	23.1	44.5		
4″	101.6	114.3	26.2	44.5		

堵头(16A) End cap | 60026

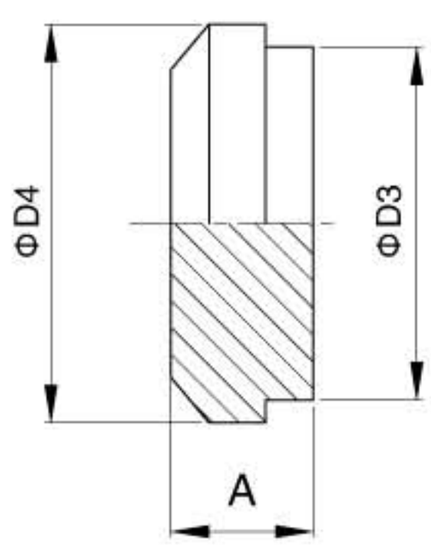

Size	A	D3	D4			kg
1″	11.9	29.5	33.3			
1 1/2″	14.3	42.6	46.8			
2″	15.9	55.7	60.3			
2 1/2″	16.7	68.8	73.8			
3″	18.3	81.9	87.3			
4″	20.6	108.1	114.3			

由任 Union(DS)

圆螺母 Round nut | 60027

★ 有关密封圈请参照本画册P101页 ★ Please refer to page 101 for the gaskets.

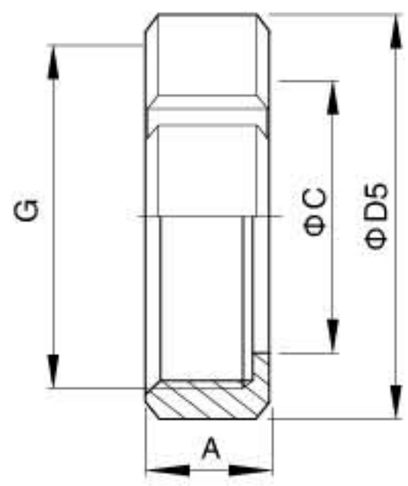

Size	A	G	C	D5		kg
1″	20.0	RD44 × 1/6	34.8	57.0		
1 1/4″	20.0	RD52 × 1/6	42.3	65.0		
1 1/2″	20.0	RD58 × 1/6	48.1	71.0		
2″	22.0	RD72 × 1/6	62.0	86.0		
2 1/2″	24.0	RD88 × 1/6	76.0	103.0		
3″	25.0	RD100 × 1/6	88.3	115.0		
4″	31.0	RD130 × 1/4	116.0	148.0		

螺纹接头 Male | 60028

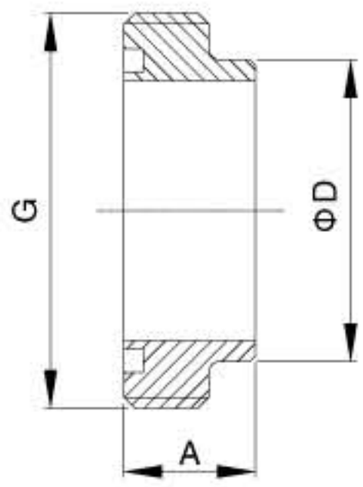

Size	A	G	D			kg
1″	20.0	RD44 × 1/6	28.6			
1 1/4″	20.0	RD52 × 1/6	35.0			
1 1/2″	22.0	RD58 × 1/6	41.3			
2″	24.0	RD72 × 1/6	55.0			
2 1/2″	26.0	RD88 × 1/6	67.0			
3″	28.0	RD100 × 1/6	80.0			
4″	34.0	RD130 × 1/4	104.8			

平接头 Liner | 60029

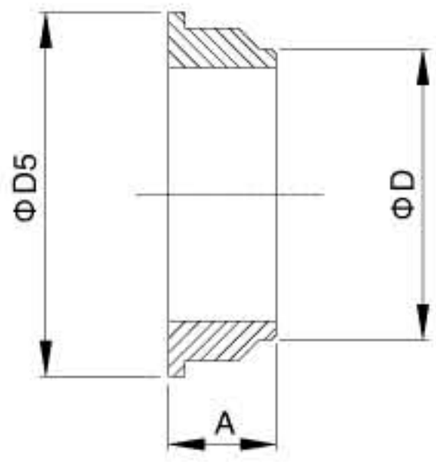

Size	A	D5	D			kg
1″	16.0	39.5	28.6			
1 1/4″	16.0	47.5	35.0			
1 1/2″	18.0	54.0	41.3			
2″	20.0	67.5	55.0			
2 1/2″	22.0	84.5	67.0			
3″	24.0	95.5	80.0			
4″	30.0	123.0	104.8			

由任 Union(RJT)

圆螺母 Round nut | 60030

★ 有关密封圈请参照本画册P101页 ★ Please refer to page 101 for the gaskets.

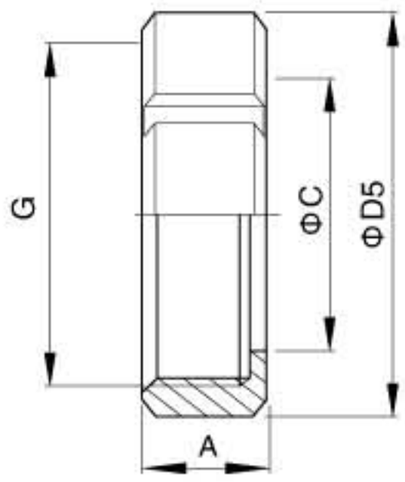

Size	A	G	C	D5		kg
1″	22.0	45.7×8TWHIT	33.3	58.5		
1 1/2″	22.0	58.4×8TWHIT	46.0	74.0		
2″	22.0	72.7×6TWHIT	58.7	85.5		
2 1/2″	22.0	85.4×6TWHIT	71.4	98.5		
3″	22.0	98.1×6TWHIT	84.1	111.6		
4″	22.0	123.8×6TWHIT	109.6	138.0		

六角螺母 Haxagon nut | 60031

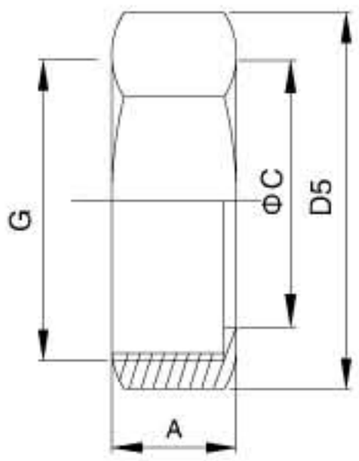

Size	A	G	C	D5		kg
1″	22.0	45.7×8TWHIT	33.3	58.7		
1 1/2″	22.0	58.4×8TWHIT	46.0	75.1		
2″	22.0	72.7×6TWHIT	58.7	91.7		
2 1/2″	22.0	85.4×6TWHIT	71.4	106.4		
3″	22.0	98.1×6TWHIT	84.1	120.3		
4″	22.0	123.8×6TWHIT	109.6	150.4		

螺纹接头 Male | 60032

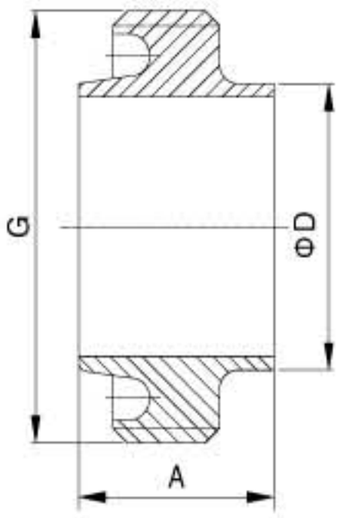

Size	A	G	D			kg
1″	27.0	45.7×8T	25.6			
1 1/2″	27.0	58.4×8T	38.3			
2″	27.0	72.7×6T	51.0			
2 1/2″	27.0	85.4×6T	63.7			
3″	27.0	98.1×6T	76.4			
4″	27.0	123.8×6T	101.8			

平接头 Liner | 60033

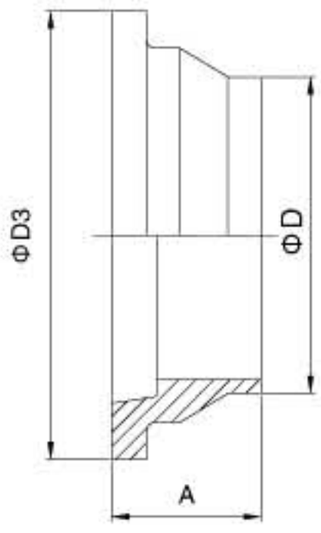

Size	A	D	D3			kg
1″	19.5	25.6	41.3			
1 1/2″	19.5	38.3	54.0			
2″	19.5	50.8	66.7			
2 1/2″	19.5	63.5	79.4			
3″	19.5	76.2	92.1			
4″	19.5	101.8	117.6			

带链条盲螺母 Blind cap with chain

DIN | 60034

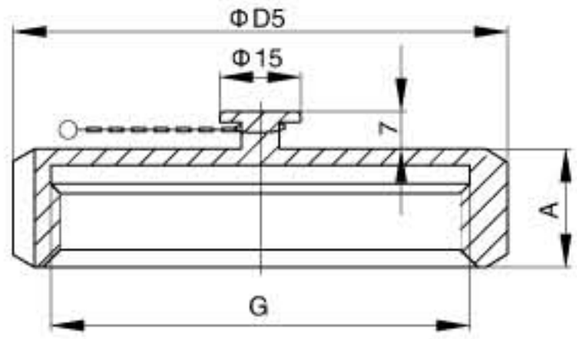

Size	A	G	D5			kg
DN10	18.0	RD28 × 1/8	38.0			
DN15	18.0	RD34 × 1/8	44.0			
DN20	20.0	RD44 × 1/6	54.0			
DN25	21.0	RD52 × 1/6	63.0			
DN32	21.0	RD58 × 1/6	70.0			
DN40	21.0	RD65 × 1/6	78.0			
DN50	22.0	RD78 × 1/6	92.0			
DN65	25.0	RRD95 × 1/6	110.0			
DN80	29.0	RD110 × 1/4	125.0			
DN100	31.0	RD130 × 1/4	146.0			
DN125	35.0	RD160 × 1/4	178.0			
DN150	40.0	RD190 × 1/4	210.0			

SMS | 60035

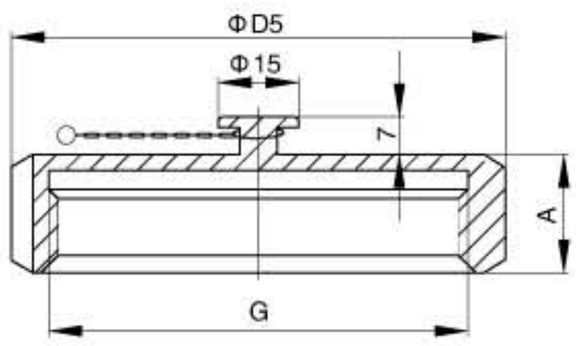

Size	A	G	D5			kg
25	20.0	RD40 × 1/6	50.0			
38	25.0	RD60 × 1/6	72.0			
51	26.0	RD70 × 1/6	82.0			
63	30.0	RD85 × 1/6	97.0			
76	32.0	RD98 × 1/6	111.0			
102小	32.0	RD125 × 1/6	138.0			
102大	45.0	RD132 × 1/6	146.0			

盲螺母 Blind cap

3A | 60036

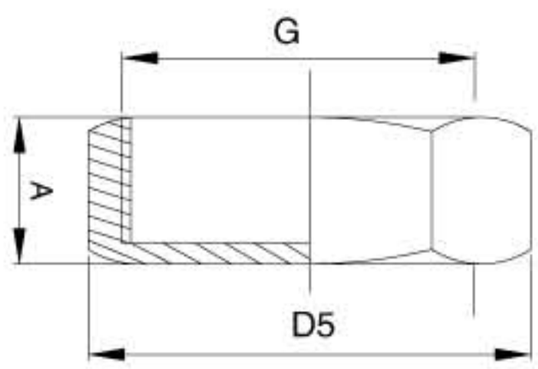

Size	A	G	D5			kg
1"	23.0	38.02 × 1/8TACME	52.0			
1 1/2"	24.6	51.54 × 1/8TACME	70.6			
2"	27.0	65.05 × 1/8TACME	88.0			
2 1/2"	29.6	78.56 × 1/8TACME	105.5			
3"	32.5	92.08 × 1/8TACME	123.0			
4"	38.1	120.14 × 1/6TACME	159.0			

ISO IDF | 60037

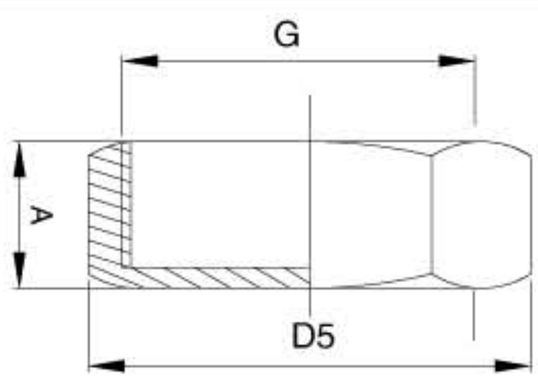

Size	A	G	D5			kg
1"	30.0	38.3 × 8TACME	46.0			
1 1/2"	30.0	51.8 × 8TACME	60.0			
2"	30.0	65.3 × 8TACME	75.0			
2 1/2"	30.0	78.8 × 8TACME	90.0			
3"	30.0	92.3 × 8TACME	105.0			
4" (ISO)	30.0	119.4 × 8TACME	135.0			
4" (IDF)	35.0	127.2 × 6TACME	143.0			

RJT | 60038

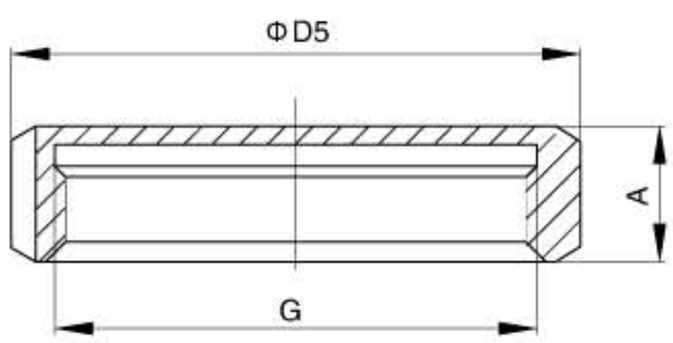

Size	A	G	D5			kg
1"	22.0	45.7 × 8TWHIT	58.5			
1 1/2"	22.0	58.4 × 8TWHIT	74.0			
2"	22.0	72.7 × 6TWHIT	85.5			
2 1/2"	22.0	85.4 × 6TWHIT	98.5			
3"	22.0	98.1 × 6TWHIT	111.6			
4"	22.0	123.8 × 6TWHIT	138.0			

由任垫圈 Gasket for union

DIN | 60039

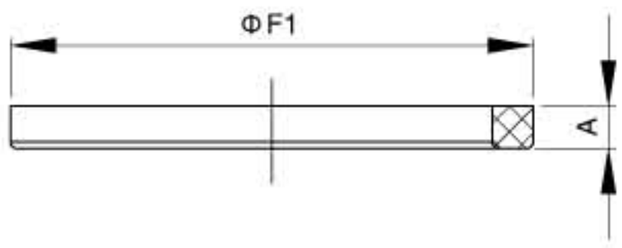

Size	A	F1				kg
DN15	5.0	26.0				
DN20	5.0	33.0				
DN25	5.0	40.0				
DN32	5.0	46.0				
DN40	5.0	52.0				
DN50	5.0	64.0				
DN65	5.0	81.0				
DN80	6.0	95.0				
DN100	6.0	114.0				
DN125	7.0	142.0				
DN150	7.0	167.0				

SMS | 60040

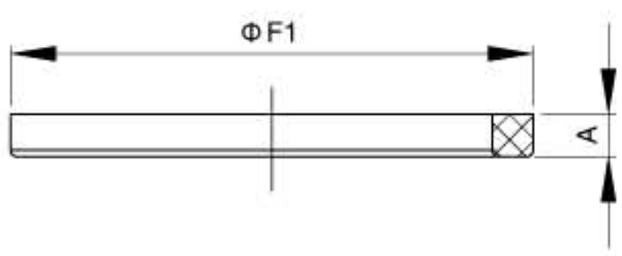

Size	A	F1				kg
25	5.5	33.0				
32	5.5	40.0				
38	5.5	48.0				
51	5.5	61.0				
63	5.5	73.0				
76	6.0	86.0				
89	6.0	99.0				
102	6.0	114.0				

DS | 60041

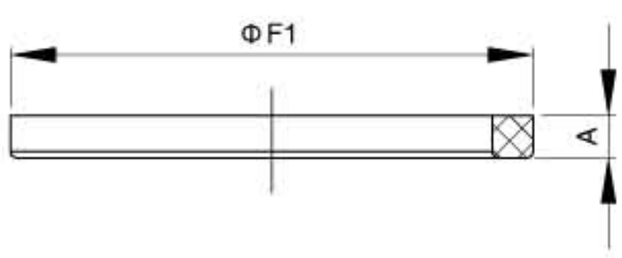

Size	A	F1				kg
1″	5.5	32.0				
1 1/4″	5.5	41.0				
1 1/2″	5.5	47.0				
2″	5.5	59.0				
2 1/2″	5.5	74.5				
3″	6.0	88.0				
4″	6.0	116.0				

ISO | 60042

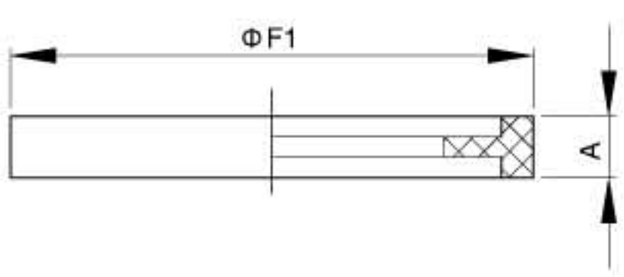

Size	A	F1				kg
1″	7.0	32.5				
1 1/2″	7.0	46.0				
2″	7.0	59.5				
2 1/2″	7.0	73.0				
3″	7.0	86.5				
4″	7.0	119.0				

RJT | 60043

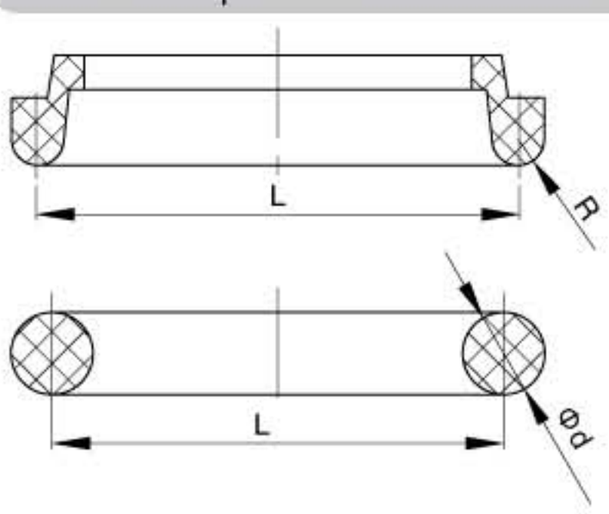

Size	L	R	d			kg
1″	33.3	3.2	6.6			
1 1/2″	46.0	3.2	6.6			
2″	58.7	3.2	6.6			
2 1/2″	71.4	3.2	6.6			
3″	84.1	3.2	6.6			
4″	109.5	3.2	6.6			